Diritti riservati All rights reserved

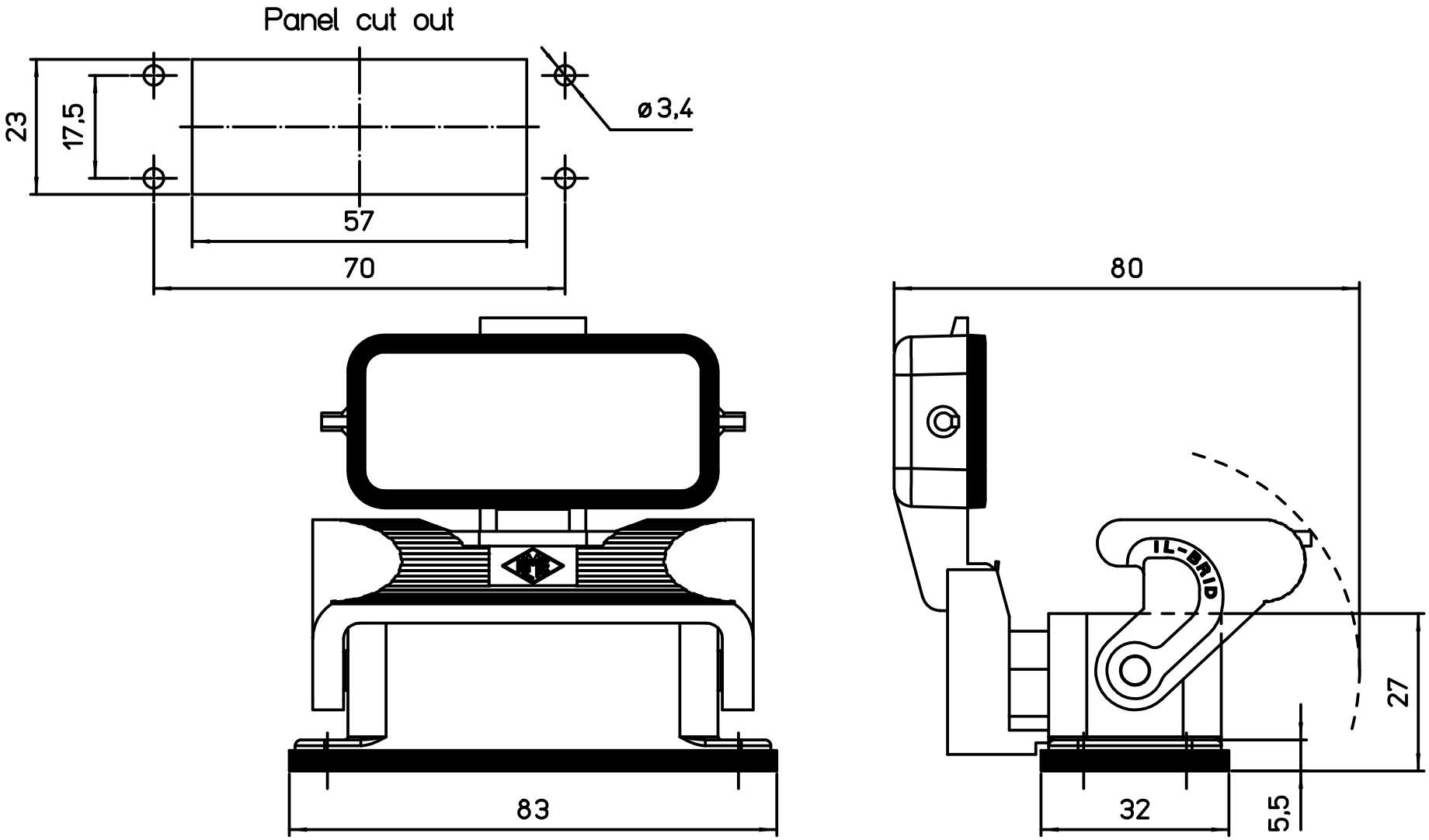

dimensions in mm	
Date	30/10/18
Sign.	D.Cominelli

CZI 15 LS

Bulckhead mounting housing with single lever and cover

Scale 1:1